CAD FILE:

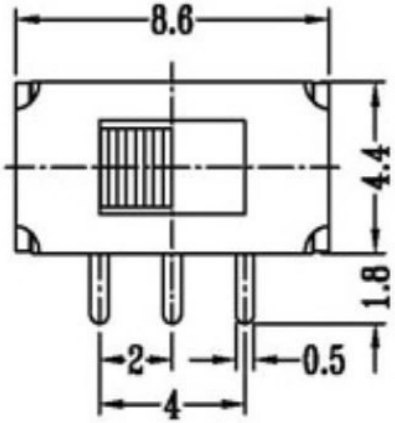

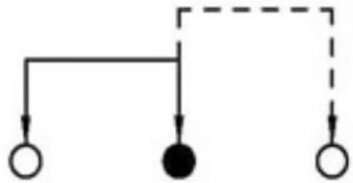

SCHEMATIC (NON-SHORTING)

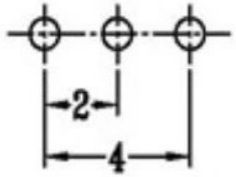

P.C.B LAYOUT
BOTTOM VIEW

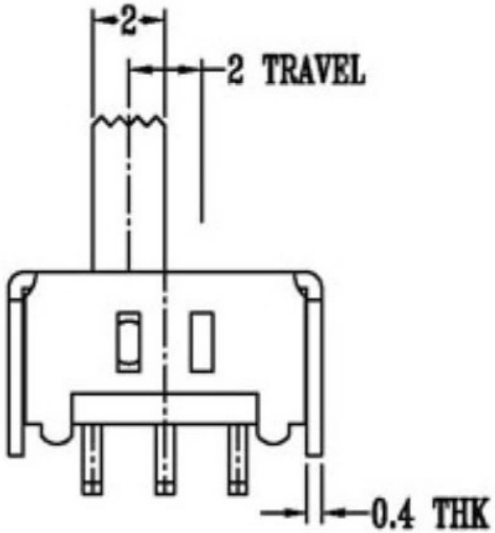

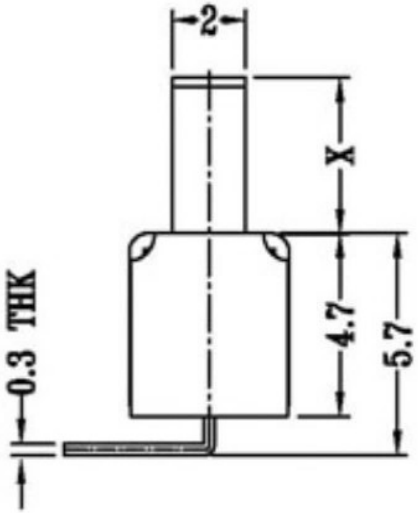

X=2-8
单位: mm

注: "*"表示关键尺寸(6个)

NO.	PARTS	MATERIALS	Q'TY	FINISH
8				
7	STEEL BALL	STEEL	1	NATURAL
6	SPRING	STEEL WIRE	1	NATURAL
5	CONTACT CLIP	PBS STRIP	2	Ag PLATED
4	TERMINAL	BRASS STRIP	8	Ag PLATED
3	BASE	PHENOLIC RESIN	1	NATURAL
2	FRAME	STEEL STRIP	1	Ni PLATED
1	KNOB	POM	1	BLACK

TOLERANCE UNLESS SPECIFIED				
WITHIN	A	2012-10-26	初 版	
OVER	ISSUE	DATE	DESCRIPTIONS OF REVISION	APPD.
TITLE : VERTICAL SLIDE SWITCH			UNIT : mm	DRWG NO.:
MODEL:			SCALE: 3:1	DWN. 2012-10-26
东莞市溪榜电子有限公司				CHK'D / APPD. 2012-10-26