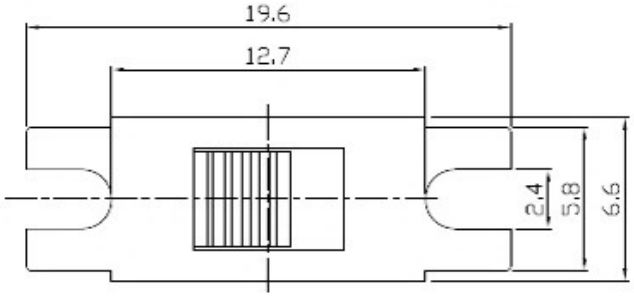

D3-12D08-GDN□-B

Knob Type	L(mm)	Case Color	
GDN	~	B	Black
		R	Red

ELECTRO-MECHANICAL CHARACTERISTICS

Refer to additional specifications

RATING	2A 125V AC
CIRCUIT	1P2T
CONTACT RESISTANCE	100mΩ MAX.
TIMING	NON-SHORTING
TRAVEL	2.2mm
OPERATING FORCE	250±100gf
OPERATING LIFE(cycles)	10,000

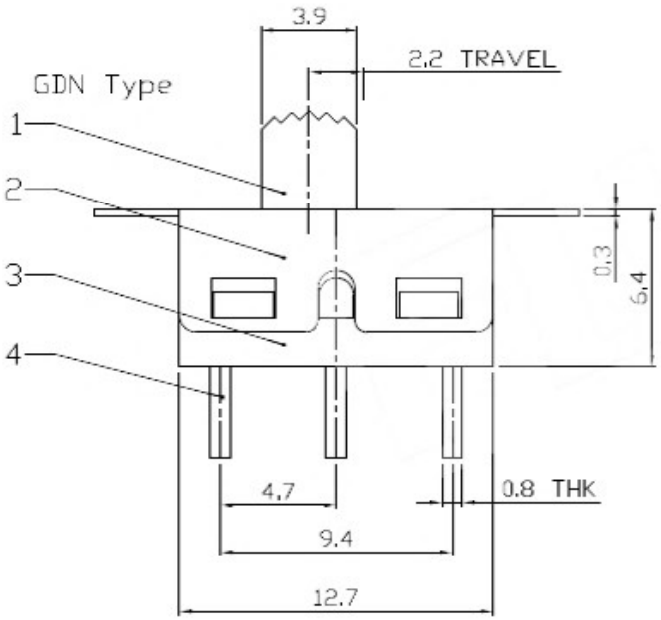

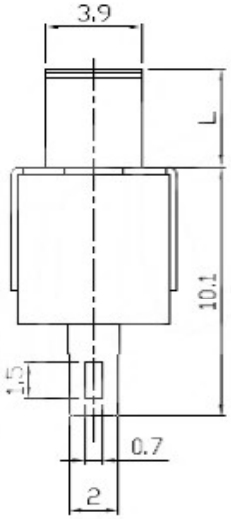

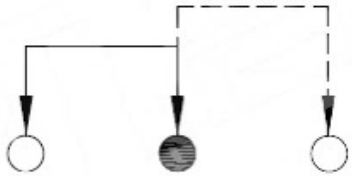

CIRCUIT DIAGRAM

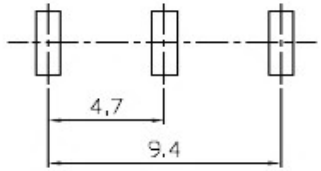

P.C.B LAYOUT
BOTTOM VIEW

NO.	PARTS	MATERIAL	Q'TY	FINISHING
8				
7	STEEL BALL	STEEL	1	NATURAL
6	SPRING	STEEL WIRE	1	NATURAL
5	CONTACT	BRASS STRIP	1	Ag PLATED
4	TERMINAL	BRASS STRIP	3	Ag PLATED
3	CASE	PA66	1	RED/BLACK
2	COVER	SUS	1	NATURAL
1	KNOB	PA66	1	BLACK

东莞市溪榜电子有限公司

标记 DING	处数 FREQUENCY	更改文件号 REVISION	签名 APPROVED	日期 DATE

设计 DESIGN	Zhenming.Chen	2017.05.17	
审核 CHECKED	Hu.li	2017.05.17	
批准 APPROVED	Jinzhou.Wang	2017.05.17	

第一视角 FIRST VIEW

比例 SCALE	1:1	一般公差 GENERAL TOLERANCE	
单位 UNIT	mm	>0.5~2	±0.10
重量 WEIGHT		>2~5	±0.25
		>5~10	±0.30
		角度 ANGLE	±0.5°

名称/NAME: SLIDE SWITCH
拨动开关