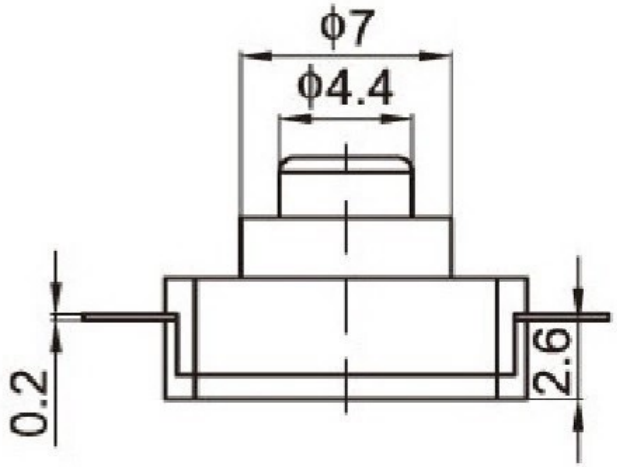

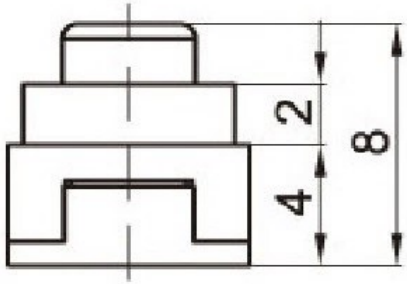

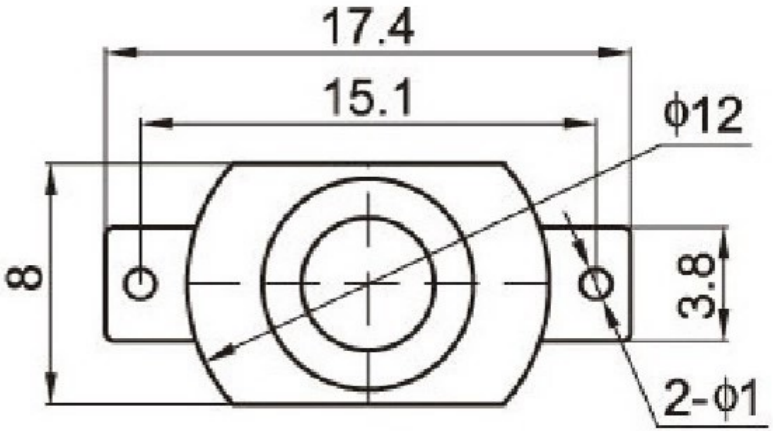

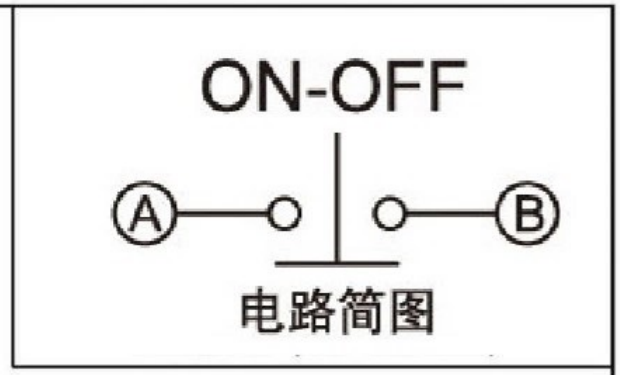

注："*"□表示关键尺寸(3个).

NO.	PARTS	MATERIALS	Q'TY	
8				
7				
6				
5	SPRING	SUS	1	NATURAL
4	CAM STICK	SUS	1	NATURAL
3	CASE	PA66/BRASS STRIP	1	GREY/Ag PLATED
2	COVER	PA66	1	BLACK
1	KNOB	PA66/PBS C5210R-EH	1	WHITE/Ag CLAD

TOLERANCE UNLESS SPECIFIED
WITHIN 1.5mm : ±0.1mm
OVER 1.5mm : ±0.2mm

ISSUE	DATE	DESCRIPTIONS OF REVISION	APPD.
A	2012-8-13	初 版	

TITLE : VERTICAL PUSH SWITCH
UNIT : mm
DRWG NO.:
MODEL:
SCALE: 5:1

DWN.		2012-8-13
CHK'D		2012-8-13
APPD.		

东莞市溪榜电子有限公司