REVISION	A

RoHS

SYMB	REVISON	DATE	APVD.

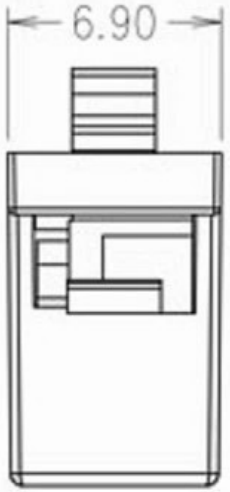

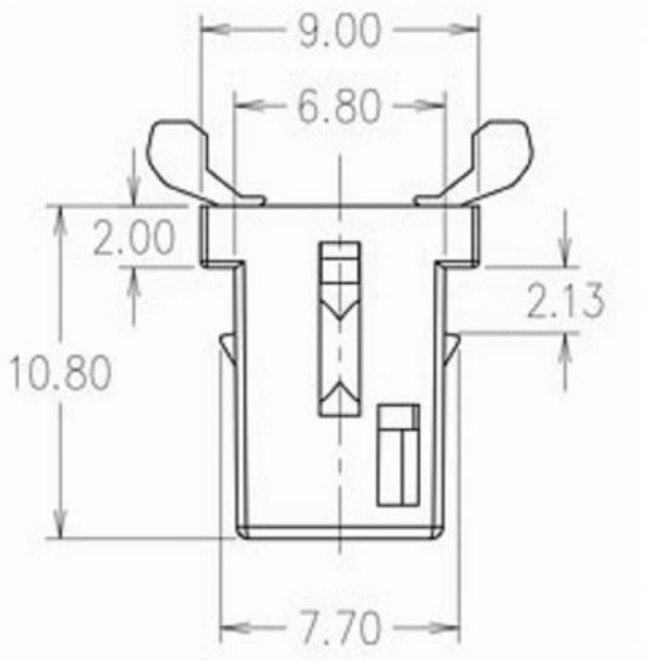

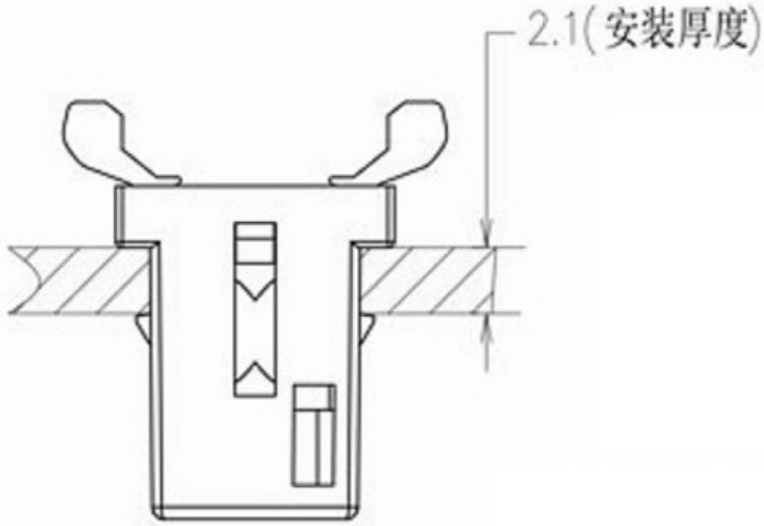

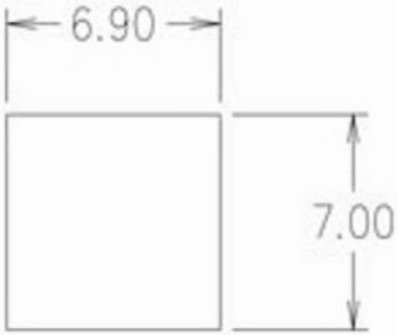

安装孔规格

TITLE	DOOR LATCH SWITCH	DRAWN	
PART NO.		CHECKED	
DRAW NO.	DL1	APPROVED	
SCALE: 2:1	UNIT: mm	DATE:	

TOLERANCE OTHERWISE UNLESS SPECIFIED	
UP TO 5	±0.2
ABOVE 5 ~ 30	±0.3
ABOVE 30 ~ 50	±0.4
ABOVE 50	±0.5
ANGLE	±3'

NO.	PARTS	MATERIAL	QTY.	FINISHING
8				
7				
6				
5				
4				
3	SPRING	SUS	1	NI PLATED
2	HOUSING	POM	1	BLACK
1	SLIDER	PA12	1	BLACK

东莞市溪榜电子有限公司