CAD FILE:

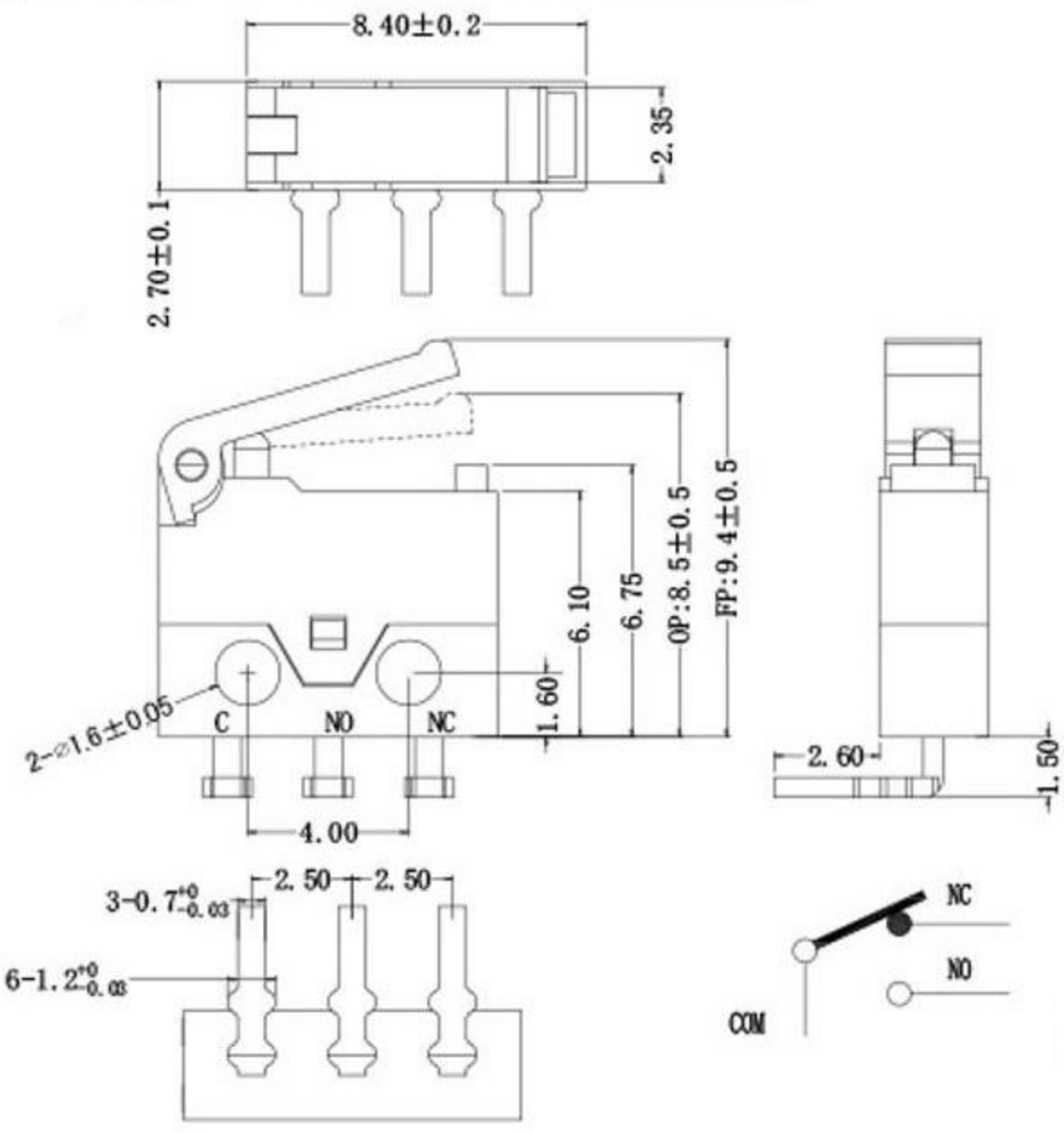

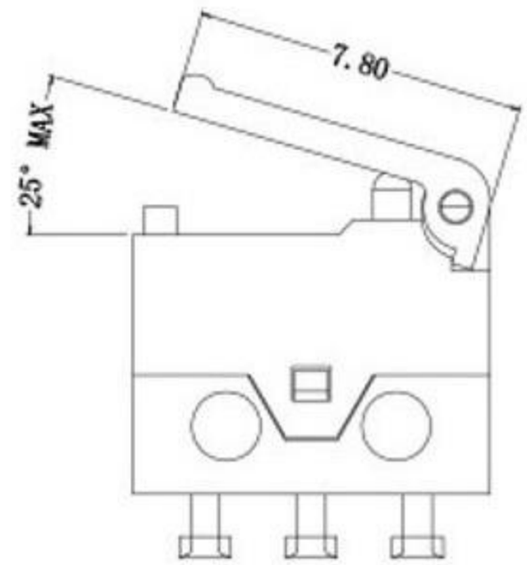

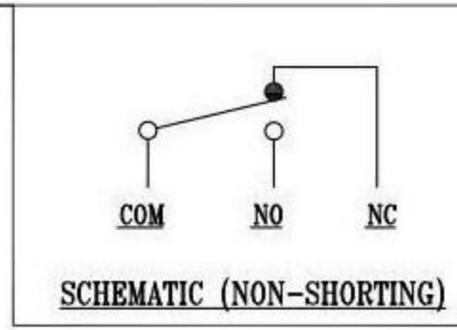

左弯脚

注："*"□表示关键尺寸(4个).

NO.	PARTS	MATERIALS	Q'TY	FINISH
7	PLASTIC HANDLE	PA66	1	BLACK
6	CONTACT	AG	1	NATURAL
5	SHRAPNEL	PBS	1	NATURAL
4	KNOE	PA9T	1	BLACK
3	COVER	PA66	1	BLACK
2	BASE	PA9T	1	BLACK
1	TERMINAL	BRASS STRIP	3	Ag PLATED

TOLERANCE UNLESS SPECIFIED
WITHIN 1.5mm : ±0.1mm
OVER 1.5mm : ±0.2mm

ISSUE	DATE	DESCRIPTIONS OF REVISION	APPD.
A		初 版	

TITLE : MICRO SWITCH
MODEL:
UNIT : mm
SCALE: 3:1
DRWG NO.:

DWN.	刘工	2008.6.8
CHK'D	戴海明	2008.6.8
APPD.	林小姐	2008.6.8

东莞市溪榜电子有限公司