RoHS

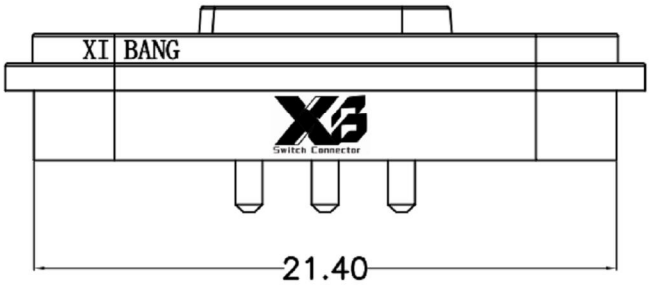

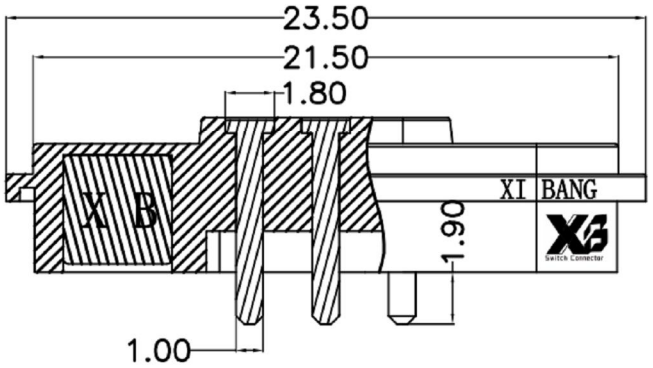

otes:
Characteristics:

A. Material (材料)
   1) Housing:High Plastic BLACK (UL94V-0)
   2) Plunger:brass c3604
   3) Barrel:brass c3604
   4) Spring:Stainless steel wire.

B. Plating (电镀)
   1) Plunger:Brass,Plating 3u' Au over Min. 50u' Ni.
   2) Barrel:Brass,Plating 3u' Au over Min. 50u' Ni.
   3) Spring:Stainless steel wire.Plating Min. 1u' Au

C. Electrical (电器性能)
   1) Operating voltage: 12V Max.
   2) Opetating current: 1A 3A Max.
   3) Contact resistance: 30mohm Max. at working height(Quiescence).

D. Mechanical (机械性能)
   1) Total stroke: 1.20mm.
   2) Working height: 0.7mm.
   3) Spring Force:65gf±10gf at working height
   4) Mechanical life: 10,000 cycle min.
   5) Don't exceed the Max. allowed compression

E. Environmental (工作环境)
   1) Storage and operating temoperature range: -40°C~+85°C
   2) Humidity range: 10% RH to 90% RH
   3) Salt spray: 48H

F. Others (其它)
   1) The dimensions marked * are critical, Should be checked in production
   2) RoHS compliant product.

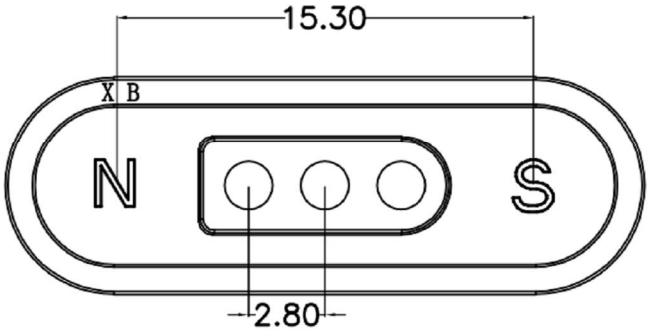

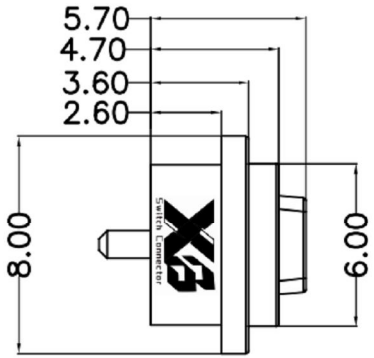

Note:

1: Material(材料):
   Housing: PA9T(胶芯:PA9T)
   Pin: Brass C3604 (针体：黄铜 C3604)
   Magnet: NdFeB (磁铁：钕铁硼)

2: Plating(电镀):
   Pin: 3u' Au over 50u'~80u' Ni
   (针体：镀金3u'，镍底50u'~80u'。)
   Magnet : Zc plated (磁铁：镀锌)

3: Electrical(电气特性):
   Insulation Resistance: 1,000MΩ minimum.
   (绝缘电阻：1,000MΩ以上)
   Dielectric Withstand Voltage: 500VAC/minute.
   (抗击电压：500VAC/minute)

4: WorkTemperature(工作环境):
   Withstanding Higt Temperature: 280℃
   Operational Temperature: ?20℃~ ?70℃

The material contained in this drawing is the property of XiBang. Any use other than that speclfically authorized by XiBang i5 prohibited. The above drawing IS subjected to change for improvement without prior notice.

ITEM NO.	DESCRIPTION	DRAWN	DATE

Switch Connector 东莞市溪榜电子有限公司
DONG GUAN XI BANG ELECTRONI CS CO., LTD.

TOLERANCE UNLESS OTHERWISE STATED: Up to 5 ±0.2; Above 5 ~ 15 ±0.3; Above 15 ~ 30 ±0.4; Above 30 ~ 50 ±0.5; Angle ±0.3°

3RD. ANGEL'S | UNITS MM

DRAWN BY: GAO. PENG	DATE 2024/5/26	MAT'L	
CHECKED BY: HE. LONG. FEI	DATE 2024/5/26	FINISH	
APPROVED BY: PANG. DONG	DATE 2024/5/26	SCALE	1 : 1
		SHEET NO.	1 of 1

TITLE	CONNECTOR		
MODLE	POGO PIN		
DWG NO.	XB-PGC-CT-28-3P-M	SIZE	A4
PART NO.	Thimble Connector	VER	R