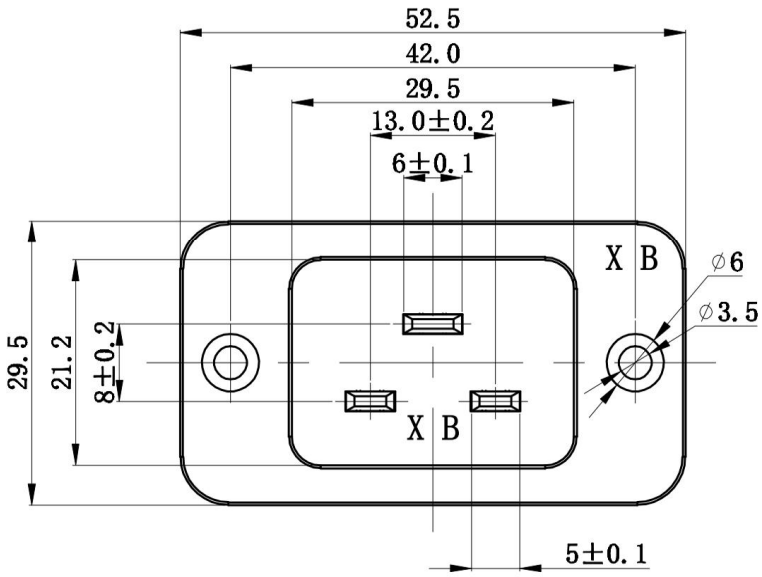

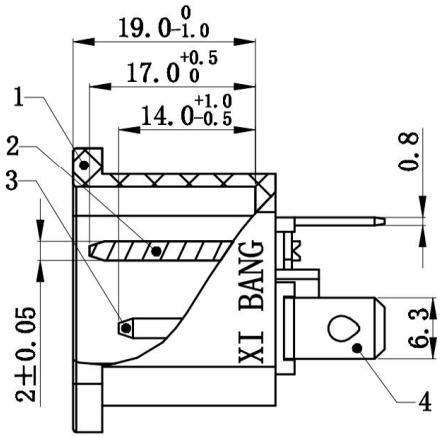

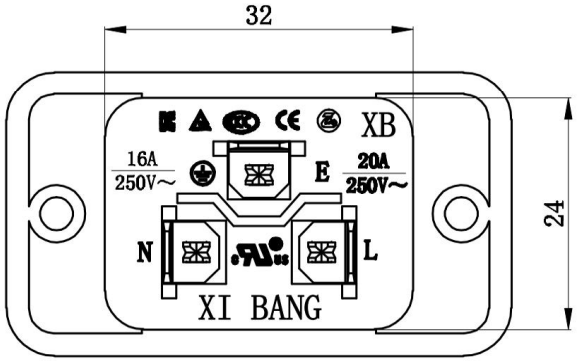

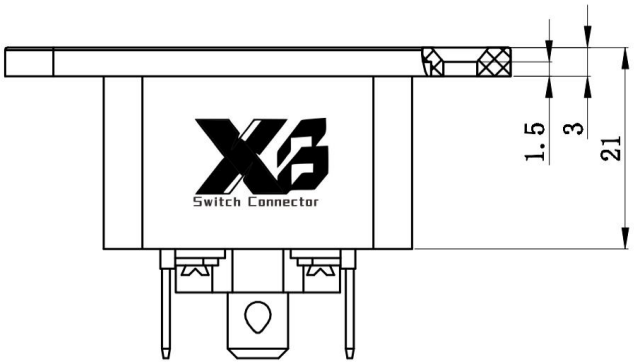

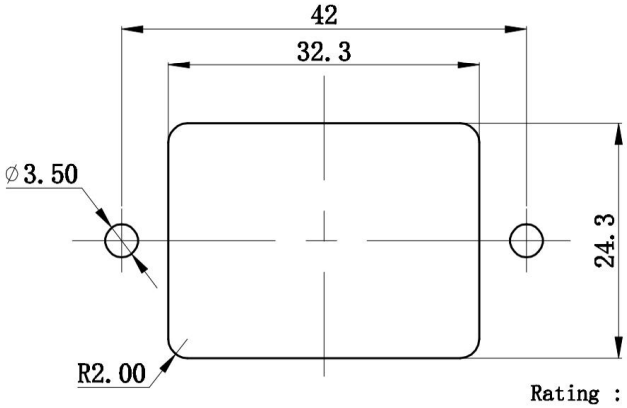

PANEL CUT-OUT

序号	名称	材质	数量
1	基座	PA66	1
2	长插销	黄铜t2.0	1
3	短插销	黄铜t2.0	2
4	6.3快插端子	黄铜t0.8	3

Rating :
16A 250V AC KC CE 3C TUV
20A 250V AC UL cUL

Insert And Extract Force: 1.36kgf~6.8kgf

Terminal Strength: ≥80N

Operating Life: ≥5000 cycles

Withstand Voltage: Between all terminals:2500VAC (50-60Hz)1min
terminals to Base:3750V AC (50-60Hz)1min
Leakage Current : 1mA

Insulation Resistance: ≥100MΩ 500V DC

A4			
A3			
A2			
A1			
REV.	DATE	REVISION DESCRIPTION	ISSUE

普通公差
COMMON TOLERANCE :

UP TO 5	±0.20
ABOVE 5 TO 30	±0.30
ABOVE 30	±0.50
ANGULAR	±5°

东莞市溪榜电子有限公司
DONG GUAN XI BANG ELECTRONICS CO.,LTD

单位 UNIT	mm	投影 PROJECTED		品名 PRODUCT NAME	Ac Inlet C20	比例 SCALE	Free
绘图 DRAWN BY	高鹏	核对 CHECKED BY	贺龙飞	料号 DWG NO.	XB-AC-20-1LZ		
日期 DATE	2024-8-1	核准 APPROVAL BY	庞东	图号 MODEL NO.			