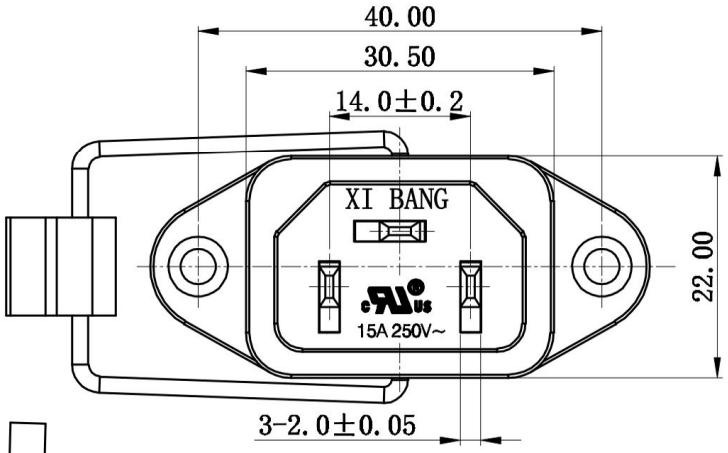

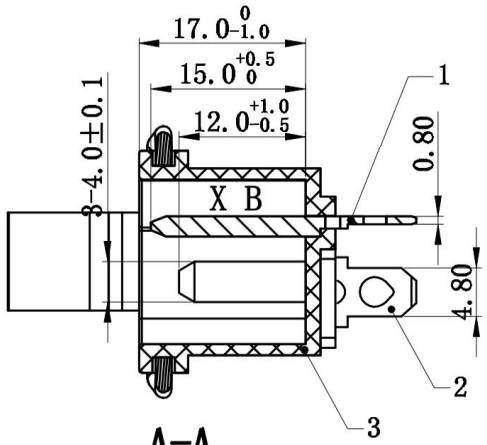

A-A

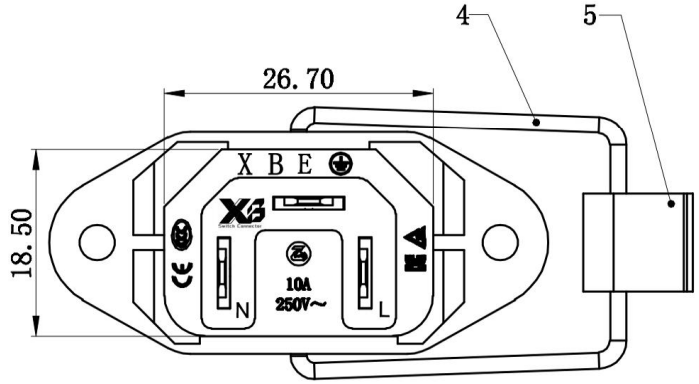

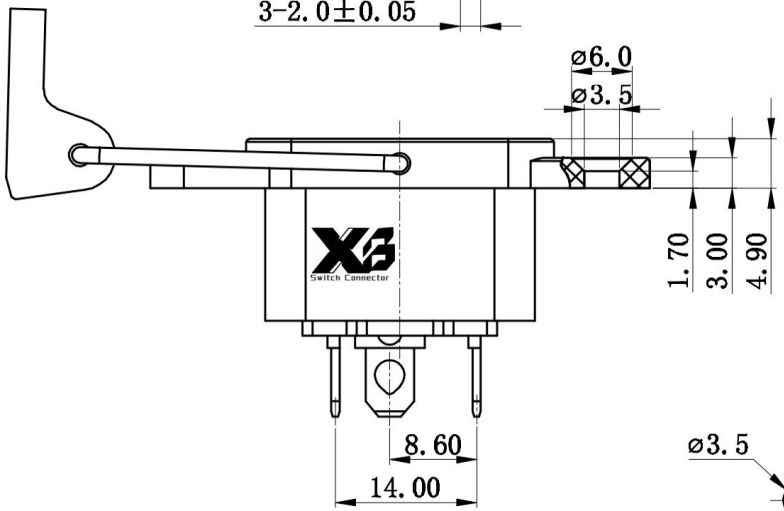

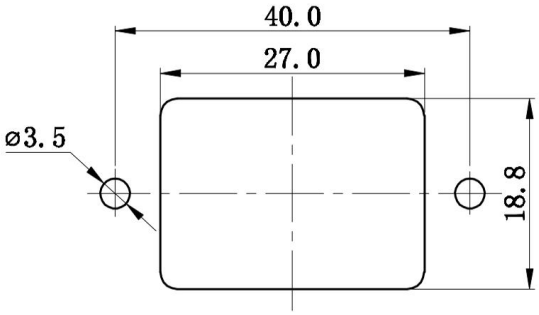

PANEL CUT-OUT

No.	Name	Material	Qty
1	Grounding pin	Brass t2.0	1
2	current-carrying pin	Brass t2.0	2
3	Base	PA66	1
4	Iron frame	Iron	1
5	Couple	PA66	1

Rating :
15A 250V AC T105 UL cUL
10A 250V AC TUV 3C KC CE

Insert And Extract Force: 1.36kgf~6.8kgf
Terminal Strength: ≥80N
Operating Life: ≥5000 cycles
Withstand Voltage: Between all terminals:2500VAC (50-60Hz)1min
terminals to Base:3750V AC (50-60Hz)1min
Leakage Current : 1mA
Insulation Resistance: ≥100MΩ 500V DC
Body Materil: NYLON66 94V-0

A4			
A3			
A2			
A1			
REV.	DATE	REVISION DESCRIPTION	ISSUE

普通公差
COMMON TOLERANCE :

UP TO 5	±0.20
ABOVE 5 TO 30	±0.30
ABOVE 30	±0.50
ANGULAR	±5°

东莞市溪榜电子有限公司
Switch Connector DONG GUAN XI BANG ELECTRONICS CO.,LTD

单位 UNIT	mm	投影 PROJECTED		品名 PRODUCT NAME	Ac Inlet C14型	比例 SCALE	Free
绘图 DRAWN BY	高鹏	核对 CHECKED BY	贺龙飞	料号 MODEL NO.	XB-AC-14-1-06LZ		
日期 DATE	2024-8-1	核准 APPROVAL BY	庞东	图号 DWG NO.			