高度尺寸
H 尺寸
9.1
9.5
10
10.5
11.5
12.5
13.5
14.5
16
18

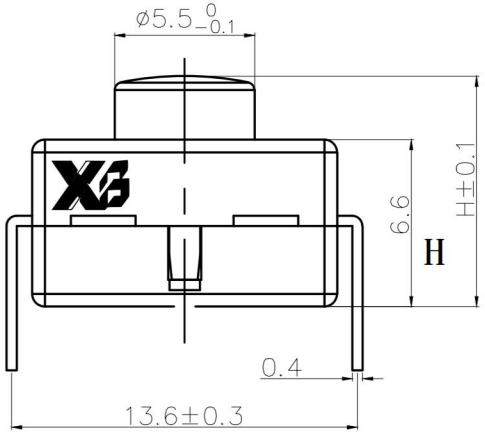

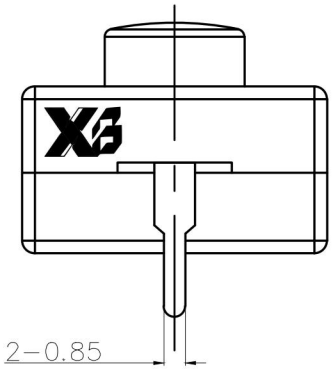

ROHS

SCHEMATIC

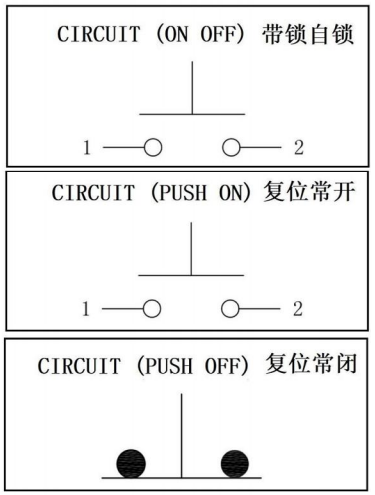

电气原理图

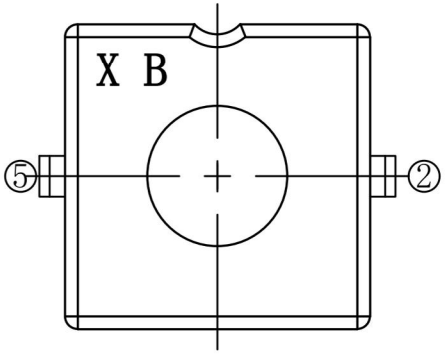

MATERIAL:

Actuator: SUS ;
Top Base: SUS;
Buttom Base:PA66+GF ;
Terminal: Brass,Silver plated ;
Nut: Brass, Ni plated .

技术要求：

1. 电气性能
   额定负荷:1A 250V AC 1E4;
   接触电阻:≤100mΩ;
   绝缘电阻:≥100MΩ;
   介电强度:≥500VAC/1min;
2. 环境温度:-25℃～75℃;
3. 相对湿度：≤95%（40℃）;
4. 操作力:800±200g;
5. 未注公差均按GB / T1804-m级。

The material contained in this drawing is the property of XiBang. Any use other than that speclfically authorized by XiBang i5 prohibited. The above drawing IS subjected to change for improvement without prior notice.

Switch Connector

东莞市溪榜电子有限公司
DONG GUAN XI BANG ELECTRONICS CO.,LTD

TITLE : PUHS BUTTON SWITCH
MODEL : XB-YT-1201-FW

UNIT : MM	DWN.	ZENQ. CHEN	DATE	
SCALE : 3 : 1	CHK'D	PENG. GAO	DATE	
VERSION 01	APPD.	FEI. LONG. HE	DATE	

TOLERANCE	ANGLE
<=1.5mm±0.1 > 1.5mm±0.2 >=10mm±0.3	±2°

NO.	PART NAME	MATERIAL	QTY.	FINISHING
7	SPRING	STEEL WIRE	1	NATURE
6	STEEL BALL	STEEL	1	NATURE
5	BOARD	PHENOLIC RESIN	1	NATURE
4	CONTACT CLIP	PBS STRIP	2	Ag PLATED
3	FRAME	IRON STRIP	1	Ni PLATED
2	TERMINAL	BRASS STRIP	8	Ag PLATED
1	KNOB	POM	1	BLACK